ZCables

Industrial Square Series Connector

Industrial square-24

Industrial Square-24 Series (Input Type)

Industrial Square-24 series connector product are available to meet Industry 4.0 automation control equipment. Can be used at Signal Transmission, Power, Sensor and Cable Connection.

Specification	
Part Number	PZAAAPLSA24101
Product Series	Industrial Square Series Connector
Connector Type	Plug Male
Shell Size	24
No. Of Contact	10 Pin
Current Rating	10A
Voltage Rating	250V
Operating voltage limit	250AC
Withstanding voltage	1000AC
Insulation resistance	2000AC
Contact resistance	30
Mating Cycles	500

Application	
Servo Motors	Automobiles
Power	Electric Vehicles
Electronics & Electrical	Communication Equipment
Mechanical	Military Applications
Medical Equipment	Industrial Application

Industrial square-24

Plug Male Interface Dimensions

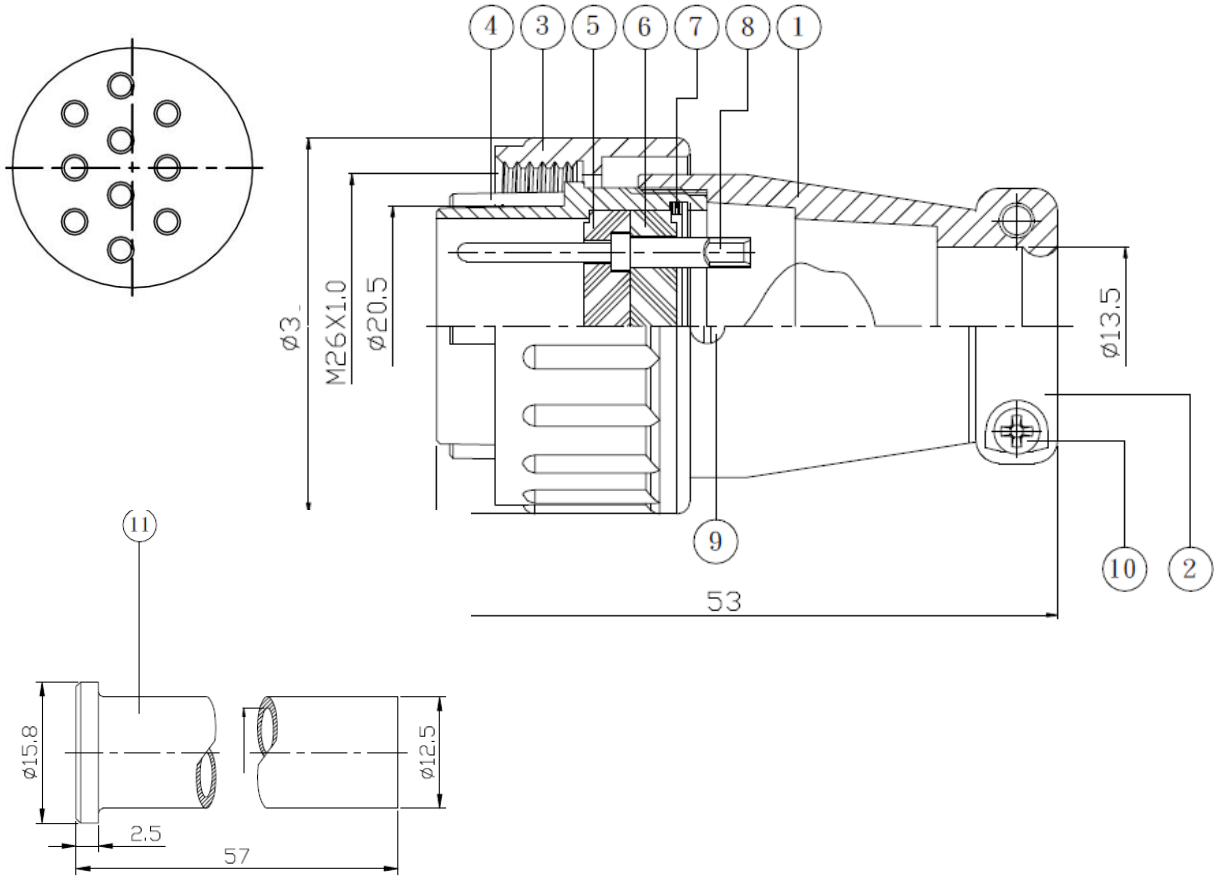

Product Material	
1.BODY	Zn ALLOY
2.CLAMP	Zn ALLOY
3.CAP	Zn ALLOY
4.TOOTH BODY	Zn ALLOY
5.INSULATOR	BAKELITE
6.INSULATOR	BAKELITE
7.BUCKLE	Stainless Steel
8.CONTACT	COPPER ALLOY
9.SCREW	COPPER ALLOY
10.SCREW	STEEL
11.PIPE	RUBBER