THIS DRAWING AND THE DATA DISCLOSED HEREIN OR HEREWITH IS NOT TO BE REPRODUCED USED OR DISCLOSED IN WHOLE OR IN PART TO ANYONE WITHOUT THE PERMISSION OF JESS-LINK PRODUCTS CO.,LTD.(JPC)

CUSTOMER DRAWING

DRWC-XXXXXX

REV.	ECN NO.	DESCRIPTION	MDF'D	APP'D	DATE
01		INITIAL DESIGN	Philip	Richard	12/18/2023
02					
03					

NO.	ELECTRICAL CHARACTERISTICS	
1	Rated Current/voltage	10A 250V
2	Operation limit voltage (AC.V.rms)	250
3	Withstanding voltage (AC.V.rms) 1 minute	1000
4	Insulation resistance(MΩ MIN.) at DC 500V	1000
5	Contact resistance (mΩ MAX.) at DC 1A	5

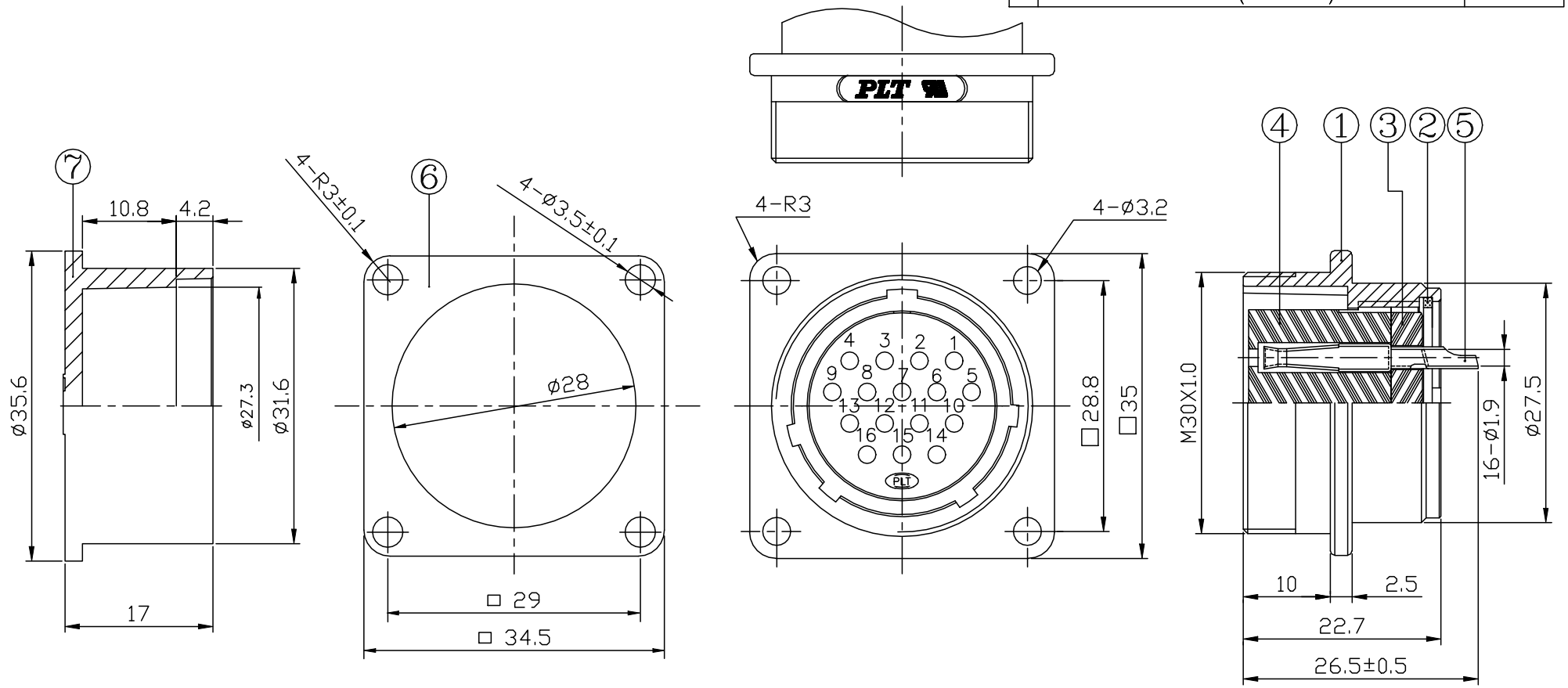

ITEM	DESCRIPTION	Q'TY
7	COVER , PLASTIC	1 PCS
6	PAD , RUBBER	1 PCS
5	CONTACT , COPPER ALLOY , M-AU	16 PCS
4	INSULATOR , BAKELITE , BLACK	1 PCS
3	INSULATOR , BAKELITE , BLACK	1 PCS
2	RING , SUS301	1 PCS
1	A-BODY , ZN ALLOY , M-CR , SANDBLASTING	1 PCS

RoHS COMPLIANT

Unit:mm(inch)

GENERAL TOLERANCES: (UNLESS SPECIFIED)
0 =±1 (0.039)
0.0 =±.5 (0.02)
0.00 =±.3 (0.012)
0.000=±.15(0.006)
0° =± 2°
0.0° =± 1°

PROJECTION

D.R. 12/18/2023 Philip
CH.K 12/18/2023 Philip
APV.D 12/18/2023 Richard

ZCables.com

TITLE: Industrial Square-28 Series 16 Pin Receptacle Female

PD./FILE NO.

SCALE 1:1 | SIZE A4 | PART NO. PZAAAPLSD28161 | REV. 01 | SHEET 1 OF 1